CITY OF
VENTURA
PUBLIC WORKS

City of San Buenaventura
Land Development

GENERAL CONDITIONS

The conditions set forth by the City Engineer for all construction work within the City right of way shall include the following:

GENERAL

1. All work to be performed under this permit shall be constructed in accordance with current applicable City of San Buenaventura Standard Construction Details, the current edition of the Standard Specifications for Public Works Construction, (SSPWC) and the attached plans from the Permittee. If a conflict(s) with any of these above documents occurs, the City Engineer or designee will determine which provision is applicable.

2. Before the start of any work in the public street, the Permittee shall advise the Police Department of the name, address and telephone number of his/her responsible representative, or those of his/her Contractor's representative, who may be contacted in the event of any emergency at any time other than regular working hours. Call (805) 339-4400.

3. Public Works Land Development Division shall be notified at least 1 working day in advance of any and all permit work involving excavations, testing, backfilling and/or surfacing operations. An inspection appointment can be made by telephoning the Land Development Inspection Line (805) 654-7767. The following information should be given when telephoning: the Contractor/Owner performing the work, the job address, phone number, encroachment permit number and time and date that you would like the inspection. A City Engineer's representative will call you to confirm your appointment.

4. The Permittee shall assume sole responsibility in determining the location of existing underground facilities prior to excavating and/or boring and in protecting same from harm. In accordance with State law, the Permittee shall contact Underground Service Alert (USA) at 1-800-227-2600 or x811, no less than 48 hours prior to any excavations within the right-of-way or on City property. USA's field locations of facilities shall be used to confirm the presence or new locations of facilities that might not be depicted accurately on the plans.

   The Permittee is responsible for blacking out or removing all USA markings prior to completion of the permitted work.

5. The street shall be maintained free at all times from dust, mud, excess earth, and debris which constitute a nuisance and danger and, upon completion of the work, all excess material, trash, dust, and other debris shall be cleaned up and disposed of at a legal site to the satisfaction of the City Engineer or designee. Best Management Practices must be employed by the Contractor at all times.

6. Proper precautions shall be taken to protect all pavement, curbs and concrete structures from damage. Any portion damaged by the Permittee's operations, in the sole opinion of the City Engineer or designee, shall be replaced in accordance with current Standard Construction Details and/or in a manner acceptable to the City Engineer or designee at the Permittee's expense.

7. The City may complete any permit conditions, which are not met within a reasonable time, with all costs to be paid by the Permittee.

8. If any work is found to be defective in any way within one-year, the Permittee shall replace, reconstruct, or repair the work to the satisfaction of the City Engineer at their expense.

9. This permit is only for work within the City of San Buenaventura right-of-way, including City owned properties. A separate encroachment permit from another jurisdiction shall be required for any work to be performed within the right-of-way contiguous to City right-of-way.

10. Any hazardous materials found during construction shall be disposed of by the Permittee or Permittee's representative in a manner satisfactory to the City Engineer and the Ventura County Environmental Health Department.

11. All contractors performing work in the public right-of-way, including City owned property and easements, shall submit certificates of insurance and insurance endorsement forms, in a manner acceptable to the City's Risk Manager/City Attorney, naming the City of San Buenaventura, its officials, employees and agents as additional insured's. The limits of liability for bodily injury, property damage, general liability and auto liability shall be $2,000,000 per occurrence.

12. Any excavations occurring within a 25-foot radius of any street tree shall be subject to approval by and performed under the supervision of the City's Parks Manager or designee. Any damage to the street tree may result in tree replacement and/or replacement costs based on the value of the damaged tree.

13. Construction equipment and materials shall not be stored within the public right-of-way unless approved by the City Engineer during non-working and non-construction hours.

14. The Developer's construction superintendent shall notify all crews of construction work hours and enforce such hours on the project site. Said hours shall be limited to Monday through Friday from 7:00 a.m. to 5:00 p.m. unless otherwise approved by the City Engineer or designee. The construction work hours shall be noted on the improvement and building plans. The definition of work includes running or idling of equipment.

15. No work shall take place on any legal or City observed holidays unless otherwise approved by the City Engineer. City observed holidays are as follows:

- New Year's Day;
- Martin Luther King, Jr., Birthday;
- Presidents' Day;
- Memorial Day;
- Independence Day;
- Labor Day;
- Veterans' Day;
- Thanksgiving Day;
- Day after Thanksgiving;
- Christmas Day.

16. Non construction hours are all hours when the contractor's employees are not physically present at the construction site actively performing contract work.

17. Night work between the hours of 5 p.m. and 7 a.m. of the following day will not be permitted unless the contractor receives prior written approval by the City Engineer or designee.

18. Contractor shall remove all graffiti from equipment used on project sites within the City and from all surfaces on a project site. Graffiti shall be removed or painted over within 24 hours of notification from the City Engineer or designee.

TRAFFIC

19. Provisions shall be made for signs, delineators, barricades, lights and flagmen and adequate protection of the traveling public during construction operations. Traffic control shall be in conformance with the current California Manual on Uniform Traffic Control Devices (CMUTCD). Traffic control plan may be required to be approved prior to start of work. There is a fee for review of the plan.

20. Barricades shall be rearranged as conditions permit to provide less interference with traffic flow and provide for ADA accessibility for path of travel. Convenient access to driveways, walks, houses, and buildings shall be provided at all times unless otherwise approved, in advance, by the City, and where required by the City Engineer or designee, temporary bridges shall be placed and maintained where necessary.

21. All traffic lanes shall be open for public use in the days and at the time, specified below or as otherwise approved by the City Engineer:

    1. Saturdays, Sundays and legal or City observed holidays: from 12:01 a.m. to 11:59p.m.
    2. Fridays and any day preceding a legal or City observed holiday: from 3:00 p.m. to 11:59 p.m.
    3. All days not covered in 1 and 2 above: 7:00 a.m. to 9:00 a.m. and 4:00 p.m. to 6:00 p.m.

22. To provide for the orderly and safe movement of traffic during the winter holiday season, construction that restricts the flow of traffic is prohibited on the following public streets between, and including, Thanksgiving Day and New Years Day:

a. Mills Rd. - Main St. to Telegraph Rd.
b. Main St. - Telephone Rd. to Olive St.
c. Telephone Rd. - Market St. to Portola Rd.
d. California St. - Poli St. to Harbor Blvd.
e. Victoria Ave. - Telegraph Rd. to Valentine Rd.
f. Telegraph Rd. - Main St. to Mills Rd.

23. In the vicinity of any Elementary, Middle, or High school, the contractor shall determine arrival and departure times of said school and shall provide for adequate traffic control for any school age pedestrian and/or bicycle routes to the school during the arrival and departure periods. The submittal of traffic control plans shall include arrival and departure times for each school. At no time will traffic control be allowed in the immediate vicinity so as to cause a hazard to a school pedestrian crosswalk during arrival and departure time periods.

24. Repaving projects on City designated local/residential roadways, except on roadways adjacent to a school, may be completely closed with proper notification to residents, as approved by the City Engineer. The roadway shall not be closed off until 8:00 a.m. and shall be reopened no later than 4:00 p.m. The contractor shall accommodate residents during closures.

25. On those days and hours when closure of traffic lanes is not prohibited under the provisions of the preceding items, no more than one lane may be closed at any time during construction hours. During any lane closure, Type II flashing arrow boards shall be used in accordance with CMUTCD on all streets with posted speeds of 35 MPH or higher.

26. Traffic signals shall, not be placed in flash operation during the hours that traffic lanes must be kept open as defined above. Under no circumstances shall traffic signals be placed under flash operation without prior approval from the City. City personnel will only place traffic signals on flash operation. Contractor shall contact the Traffic Engineer at least 2 working days in advance to coordinate signal service.

27. At least 72 hours in advance of starting any work that may affect the access to private properties, the Permittee shall provide written notice to such property owners. When access must be restricted, as determined by the City Engineer or designee, it shall occur only for the time period required for accomplishing that particular item of work.

28. Construction will only be allowed between the hours of 10 p.m. and 6 a.m. on the following streets:

a. Mills Rd. - Main St. to Telegraph Rd.
b. Main St. - Telephone Rd. to Olive St.
c. Telephone Rd. - Market St. to Portola Rd.
d. California St. - Poli St. to Harbor Blvd.
e. Victoria Ave. - Telegraph Rd. to Valentine Rd.
f. Telegraph Rd. - Main St. to Mills Rd.

TRENCHING

29. When the permit authorizes installation by an open trench method, not more than one lane of the street pavement shall be blocked to traffic at any one time unless

approved by the City Engineer. All trenches shall be closed at the end of each working day and all traffic lanes or pedestrian travel ways shall be opened. After the pipe is placed in the open section, the trench is to be backfilled in accordance with Standard Construction Detail No.'s 112 and 113, and the latest revision thereto, the surfacing patched in a manner satisfactory to the City Engineer or designee, and that portion open to traffic before the pavement is cut for the next section. In lieu of backfilling and resurfacing, bridging with adequate steel plates may be used for a period not to exceed 3 days unless otherwise approved by the City Engineer. When steel bridging plates are approved in traffic lanes for time periods exceeding 3 calendar days, the plates shall be inset flush with pavement surface. Jacking under railroad tracks (subject to an acceptable agreement with the railroad company), major city streets, and other structures will be required as specified by the City Engineer or designee.

30. All trenches shall be backfilled or covered at night in such a manner as to prevent accidental entry into the excavation by vehicles or pedestrians. Permanent pavement shall be placed within one week after completion of backfill operations. Temporary asphalt concrete or steel plates with temporary asphalt concrete wedges around the plates shall be placed at the close of each day's operation unless otherwise approved by the City Engineer or designee.

31. All pipes are to be installed in a manner to provide a minimum clearance of 30 Inches between the top of pipe and the finished surface unless otherwise approved by the City Engineer.

32. All backfill shall be in accordance with Standard Construction Detail No.'s 112 and 113 and the latest revisions thereto. The City Engineer or designee shall be the sole judge as to the acceptability of the excavated material for use as backfill. Imported backfill shall be certified as being free of hazardous materials. Backfilling the trench with slurry concrete Class 100-E-100 is mandatory for streets under a 5-year overlay or 2-year slurry/cape seal moratorium and may be permitted on other streets under certain conditions as approved by the City Engineer or designee. The use of sand (with a sand equivalent of 20 or greater) will also be permitted in soil conditions where the sand will not migrate. In sandy fill for full depth, water settling for compaction may be permitted under certain conditions as approved by the City Engineer or designee.

PAVING

33. Rock or macadam base shall be replaced with untreated rock base equal in depth to that of the existing base, except that the minimum depth stall be 6 inches. In lieu of untreated rock, Class 520-C-2500 concrete or asphalt concrete may be used. Paving over new concrete will not be allowed until 48 hours after concrete is placed.

34. All surface concrete pavement encountered shall be scored prior to excavation by means of a concrete saw. Repairs to concrete pavement shall be made with High-Early Strength Portland cement concrete containing a minimum of six sacks of cement per cubic yard, 560-C-3250.

35. All concrete shall contain Type II low alkali cement and Caltrans approved non-reactive aggregate. The thickness of concrete shall equal that of the existing, except a minimum of 6 inches shall be used. Concrete shall be satisfactorily cured and protected from vehicular traffic for not less than 3 days.

36. All AC pavement shall be scored to at least one-half its depth prior to excavation by means of a concrete or equivalent type saw. The AC patch shall be constructed to a minimum depth equal to that of the existing pavement plus 1 -inch (minimum 4"). All joins between new AC and existing AC shall be sealed with an emulsion seal coat consisting of SS-1h emulsified asphalt.

37. New asphalt concrete shall be flush with existing surface, shall conform to existing slope of pavement and extend one-foot beyond the outside side of trench as shown on the Standard Construction Detail No. 112 and latest revisions thereto.

38. Existing concrete sidewalks shall be removed and replaced the full width of the existing sidewalk when removing or cutting for any reason. Existing sidewalk, curb, and/or gutters shall be removed to the nearest expansion joint or perpendicular score mark/cold joint by sawcutting prior to removal.

VENTURA KEYS, CHANNEL SLOPE REPAIR

39. All rip rap repair to the slopes of the Ventura Keys channels shall be done in accordance with the City Standard Detail No. 406, entitled "Rip Rap Standard Detail" and in compliance with Coastal Development Permit (CDP) No. 4-94-173 and the Corps of Engineers 404 permit. By completing the repairs under this encroachment permit, the Permittee is agreeing to abide by all conditions contained in CDP No. 4-94-173 and the Army Corps of Engineers permits.

STORMWATER POLLUTION CONTROL

40. All construction activities shall use Best Management Practices (BMPs) to effectively prohibit the entry of pollutants from the construction site into the storm drain system. For a complete listing of BMPs refer to the California Stormwater BMP Handbook-Construction at www.cabmphandbooks.com. Attached are typical BMPs used on construction sites. For additional BMPs, refer to California Stormwater BMP Handbooks. The Engineer may require the contractor to prepare and submit a Stormwater Pollution Control Plan (SWPCP). The purpose of the SWPCP is to identify potential pollution sources that may affect the quality of discharges and to design the use and placement of BMPs.

VENTURA WATER (SEWER/WATER)

41. Sewer laterals shall be per City Standard Detail No. 204 "Standard House Connection".

42. Slip lining of existing sewer laterals will be allowed for existing dwelling units with the installation of a reducer at the wye connection. The slip lining shall not be less than 4" inside diameter and shall consist of pipe material in accordance with City Standard Detail No. 200 "Sewer Line General Notes".

43. The City Water Department's "Chief Water Operator" is required to approve and monitor all work associated with tie-ins, hot tapping, connections, and alterations to the water system. Approved plans do not constitute an approval to perform any work on the City water system.

44. All potable water system valve operations shall be performed by, or under the direct supervision of, Ventura Water "Chief Water Operator." Coordinate all valve operations with the City Public Works Construction Inspector. Schedule all valve operations with the inspector 10 working days in advance.

SURVEY

45. Survey monuments, property markers, and tie points shall be preserved and referenced before construction and replaced after construction pursuant to Section 8771 of the Business and Professions Code. Monuments are typically located in the sidewalk or on the curb and can include tags, nails, and scribed crosses.

46. Benchmark disks shall not be destroyed, or disturbed until a replacement with a second order, class one, geodetic elevation has been accepted by the City Engineer.

ADDITIONAL SPECIAL CONDITIONS

_____

_____

_____

_____

_____

_____

_____

General Notes

1. Best Management Practices (BMP's) contained herein reflect minimum requirements. For additional BMP's refer to California Stormwater BMP Handbooks.

2. All construction activity shall be performed in accordance with a Stormwater Pollution Control Plan (SWPCP) developed and implemented in compliance with requirements of the Ventura Countywide Stormwater Quality Management Program, National Pollution Discharge Elimination System (NPDES) Permit No. CAS063339.

3. The SWPCP shall:
   a. Identify potential pollutant sources and include the design and placement of BMP's to effectively prohibit the entry of pollutants from the construction site into and onto the street and storm drain system during construction.

   b. Be kept on site and amended to reflect changing conditions throughout the coarse of construction.

   c. Be kept up to date. Any additional updates requested by agency representative are to be made immediately.

4. Non-Stormwater discharges are prohibited from entering any storm drain system and/or street.

5. Discharges of pumped ground water require a discharge permit from the State of California Regional Water Quality Control Board (RWQCB).

6. Pollutants shall be removed from stormwater discharges to the Maximum Extent Practicable (MEP) through design & implementation of the SWPCP.

7. A standby crew for emergency work shall be available at all time during the rainy season (Nov. 1 to Apr. 15). Necessary materials shall be available on site and stockpiled at convenient locations to facilitate rapid construction of emergency devices when rain is imminent.

8. Portable sanitary facilities shall be located on relatively level ground away from traffic areas, drainage courses, and storm drain inlets.

9. Employees, subcontractors and suppliers shall be educated on all BMP's including concrete waste storage and disposal procedures.

10. Sediment control practices shall effectively prevent a net increase of sediment load in stormwater discharge.

A

Catch Basin/Inlet Protection

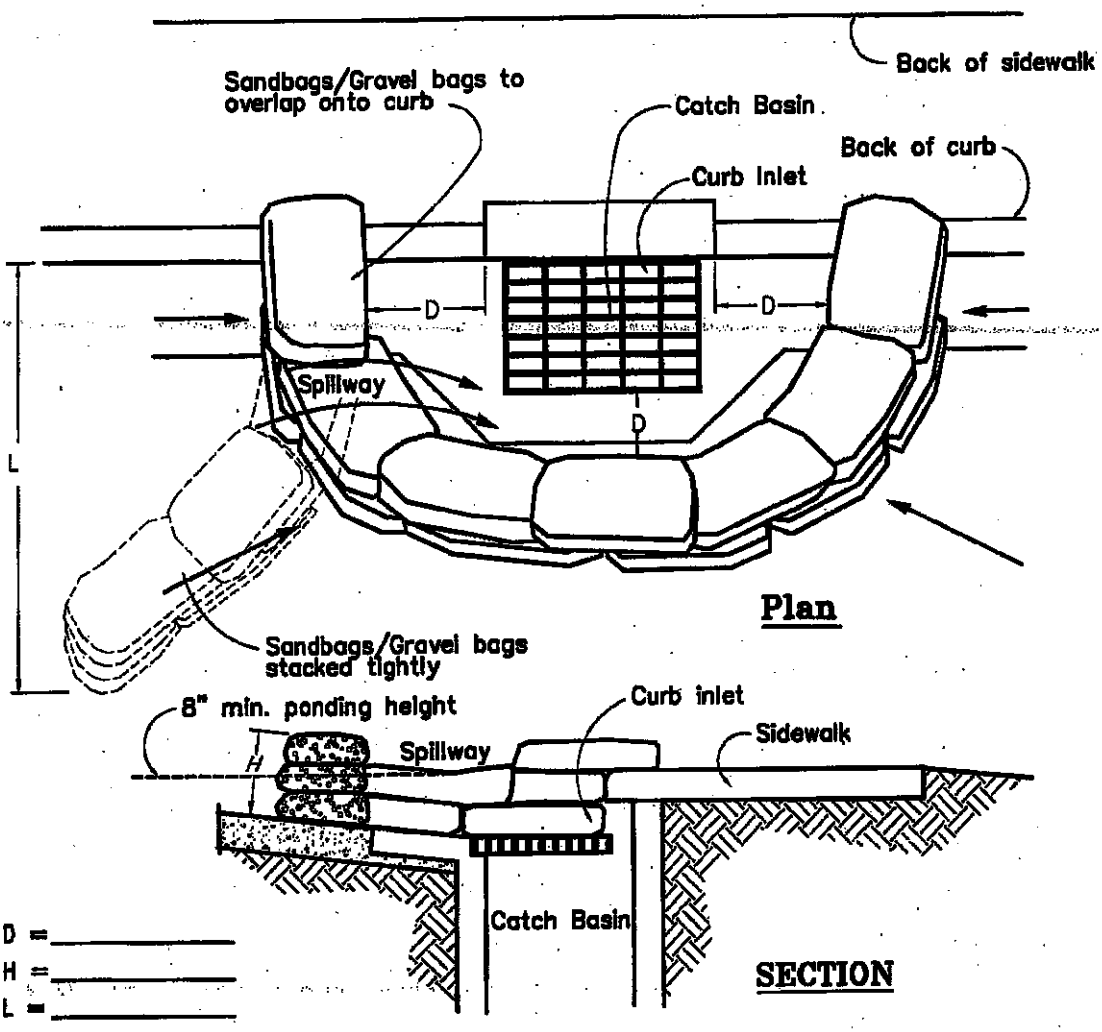

Notes:

1. *Catch Basin/Inlet protection shall be installed wherever there is a potential of stormwater or non-stormwater being discharged into it.*
2. *Inlet protection is required along with other pollution prevention measures such as; erosion control, soil stabilization, and measures to prevent tracking onto paved surfaces.*
3. *Modify inlet protection as needed to avoid creating traffic hazards.*
4. *Include inlet protection measures at hillside v-ditches and misc. drainage swales.*
5. *Inlet protection shall be inspected and accumulated sediments removed. Sediment shall be disposed of properly and in a manner that assures that the sediment does not enter the storm drain system*
6. *Damaged bags shall be replaced immediately.*
7. *Additional sandbag sediment traps shall be placed at intervals as indicated on site plan.*

B

Silt Fence

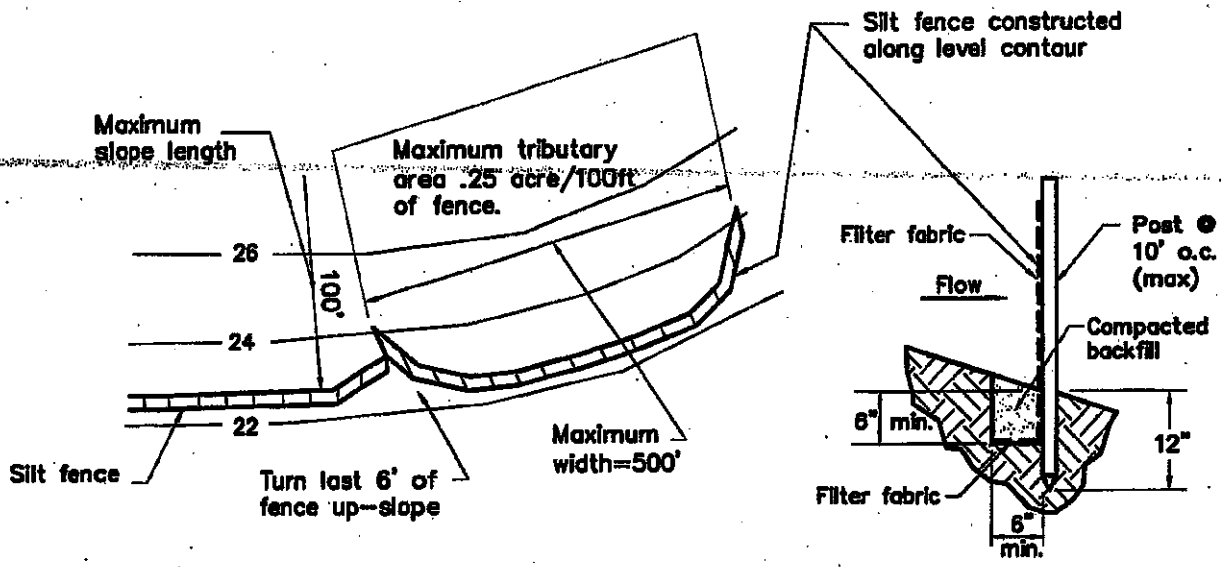

Notes:

1. *Construct the silt fence along a level contour.*
2. *Silt fences shall remain in place until the disturbed area is permanently stabilized.*
3. *Provide sufficient room for runoff to pond behind the fence and allow sediment removal equipment to pass between the silt fence and toe of slope or other obstructions. About 1200 sq. ft. of ponding area shall be provided for every acre draining to the fence.*
4. *Turn the ends of the filter fence uphill to prevent stormwater from flowing around the fence.*
5. *Leave an undisturbed or stabilized area immediately downslope from the fence.*
6. *Do not place in live stream or intermittently flowing channels.*
7. *When standard filter fabric is used, a wire mesh support fence shall be fastened securely to the upslope side of the posts using heavy-duty wire staples at least 1 inch long, tie wires or hog rings.*

C

Stabilized Construction Entrance

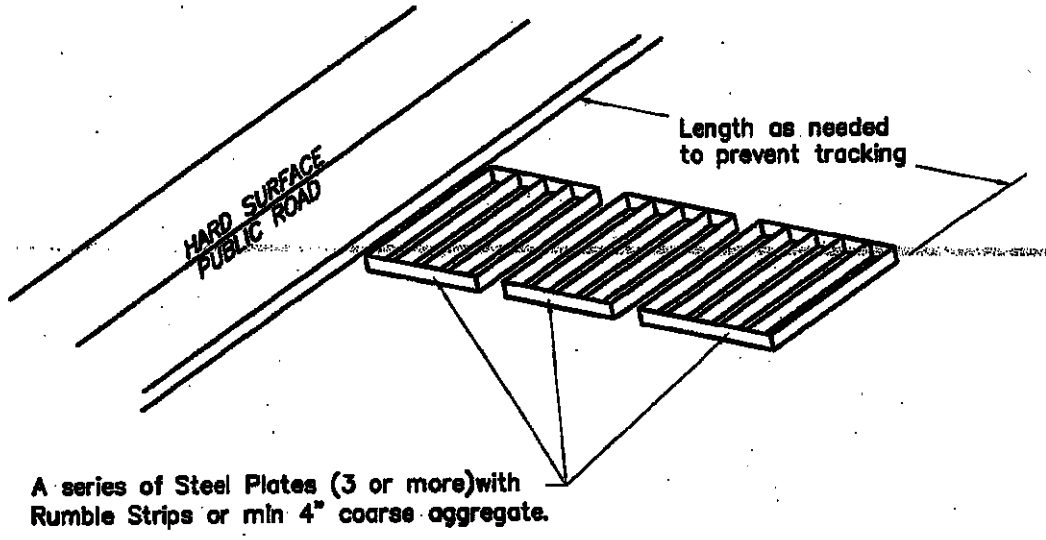

Notes:

1. *Sediments and other materials shall not be tracked from the site by vehicle traffic. The construction entrance roadways shall be stabilized so as to prevent sediments from being deposited into the public roads. Depositions must be swept up immediately and may not be washed down by rain or other means into the storm drain system.*
2. *Stabilized construction entrance shall be:*
   a. *Located at any point where traffic will be entering or leaving a construction site to or from a public right of way, street, alley, and sidewalk or parking area.*
   b. *A series of steel plates with "rumble strips", and/or min 4" coarse aggregate with length, width & thickness as needed to adequatly prevent any tracking onto paved surfaces.*
3. *Adding a wash rack with a sediment trap large enough to collect all wash water can greatly improve efficiency.*
4. *All vehicles accessing the construction site shall utilize the stabilized construction entrance sites.*

Street Maintenance

1. *Remove all sediment deposited on paved roadways immediately.*
2. *Sweep paved areas that receive construction traffic whenever sediment becomes visible.*
3. *Pavement washing with water is prohibited if it results in a discharge to the storm drain system.*

D

Erosion Control

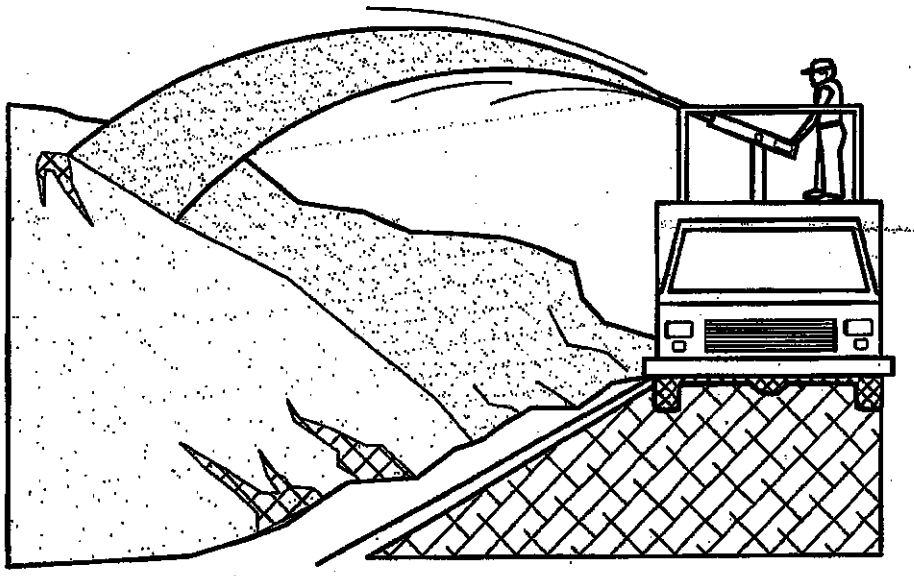

Notes:

1. *Soil/Slope stabilization practices shall be designed to preserve existing vegetation where feasible and to revegetate open areas as soon as feasible after grading. These control practices shall include temporary seeding, permanent seeding, mulching, sod stabilization, vegetative buffer strips, protection of trees, or other soil stabilization practices.*
2. *Soil stabilization shall be implemented on all inactive disturbed areas from November 1 thru April 15 and on all disturbed areas during a rain event or potential rain.*
3. *Stabilization practices shall control/prevent erosion from the forces of wind and water.*
4. *Stabilization practices shall be implemented in conjunction with sediment trapping/filtering practices and practices to reduce the tracking of sediment onto paved roads.*
5. *When using straw mulching, the minimum application shall be 2 tons/acre. Mulch must be anchored immediately to minimize loss by wind or water.*
6. *When using hydroseeding/mulching, the minimum application of wood fiber shall be 1,500 lbs/acre, that does not contain more than 50 percent newsprint.*
7. *For seeding recommendations, contact: USDA, Natural Resources Conservation Service or Ventura County RCD.*

E

Material Storage

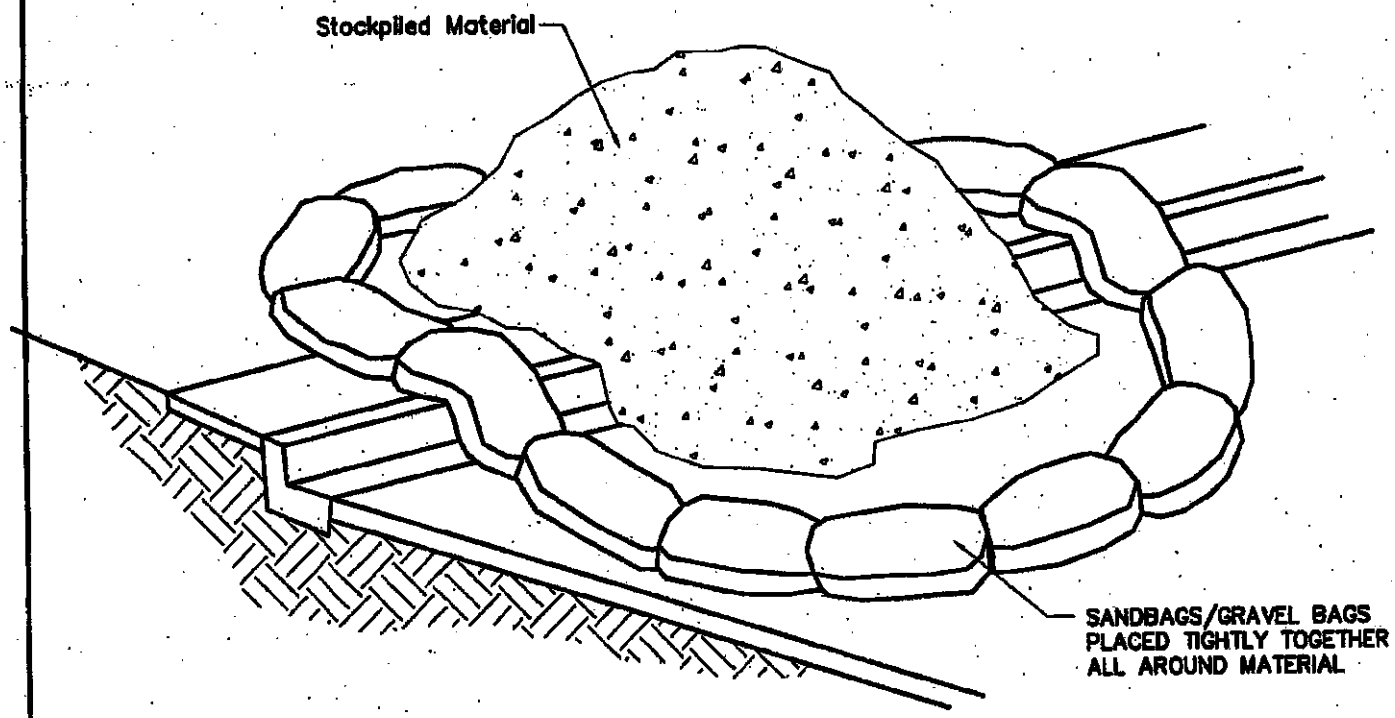

Notes:

1. *Dirt and other construction related materials placed in the street or on other impervious surfaces must be contained with sandbags or other measures to prevent transport to the stormdrain system.*
2. *Any construction material stored or stockpiled on-site shall be protected from being transported by the force of wind or water.*

F

Concrete Waste Management

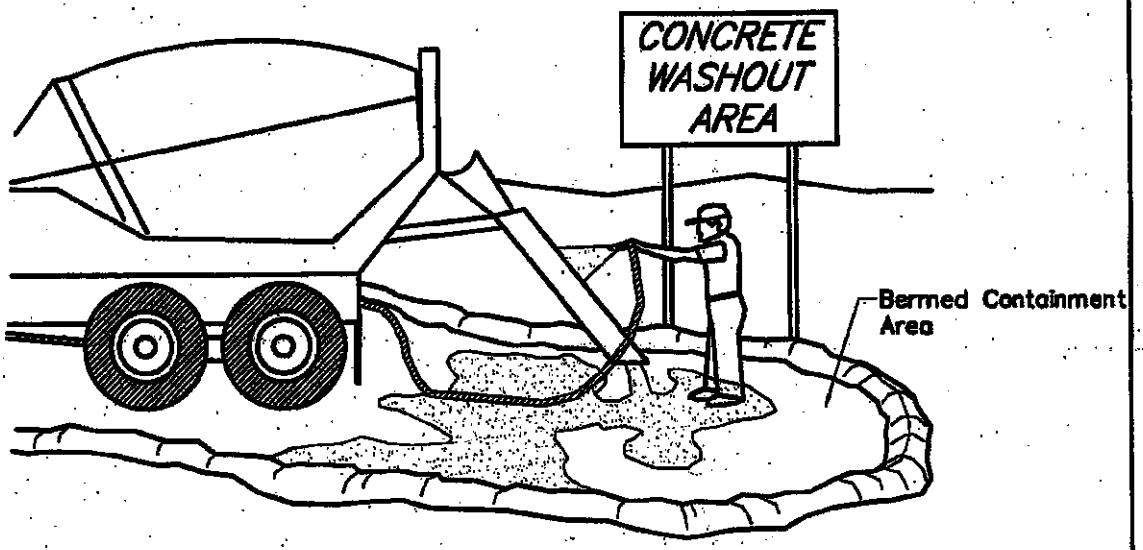

Notes:

1. *Excess and waste concrete shall not be washed into the street or into a drainage system.*
2. *For washout of concrete and mortar products, a designated containment facility of sufficient capacity to retain liquid and solid waste shall be provided on site.*
3. *Slurry from concrete and asphalt saw cutting shall be vacuumed or contained, dried, picked up and disposed of properly.*

G

Vehicle/Equipment Fueling

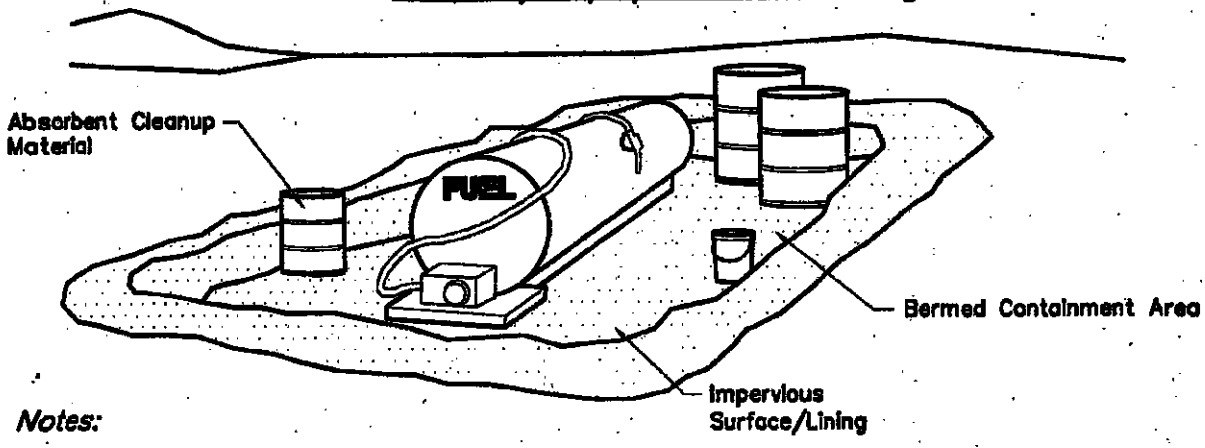

Notes:

1. *Fueling shall be performed in a designated area, away from drainage courses.*
2. *Absorbent cleanup material shall be on site and used immediately in the event of a spill.*

H

Equipment Repair/Maintenance

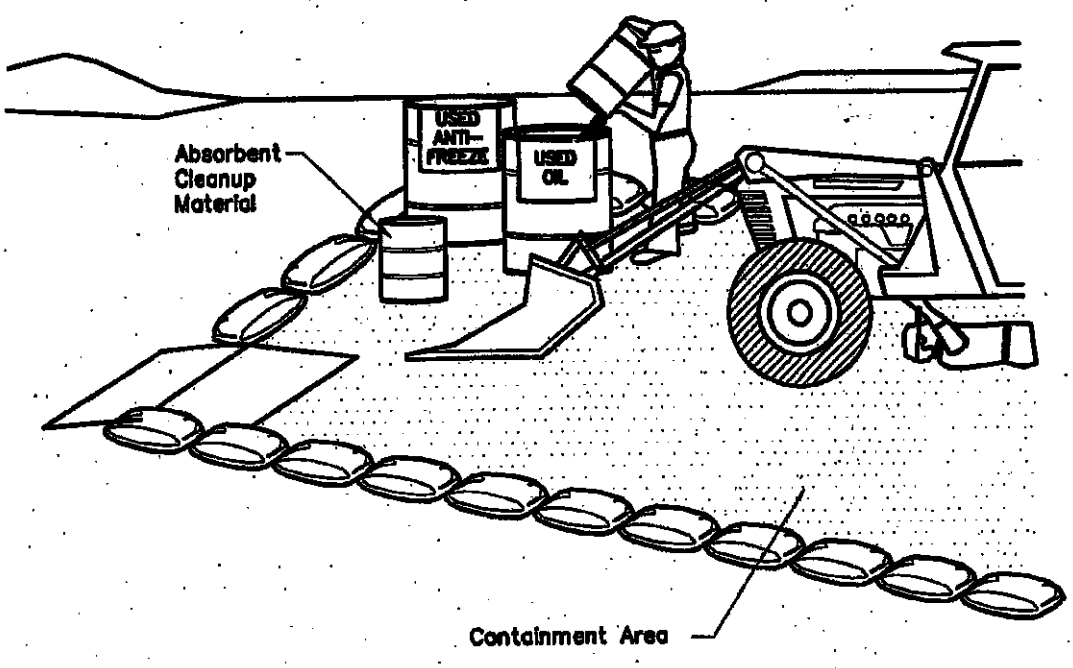

Notes:

1. *Leaking vehicles and equipment shall not be allowed on-site. Equipment and vehicles shall be inspected frequently for leaks and shall be repaired immediately. Clean up spills and leaks promptly with absorbent materials; do not flush with water.*
2. *Vehicles and equipment shall be maintained, and repaired on-site only in designated areas. Prevent run-on and run-off from designated areas. Containment devices shall be provided and areas shall be covered if necessary.*
3. *Designate on-site vehicle and equipment maintenance areas, away from storm drain inlets and watercourses.*
4. *Always use secondary containment, such as a drain pan or drop cloth, to catch spills and leaks when removing or changing fluids.*
5. *Legally dispose of used oils, fluids, and lubricants.*
6. *Provide spill containment dikes or secondary containment around stored oil, fuel, and chemical drums.*
7. *Maintain an adequate supply of absorbent spill cleanup materials in designated area.*