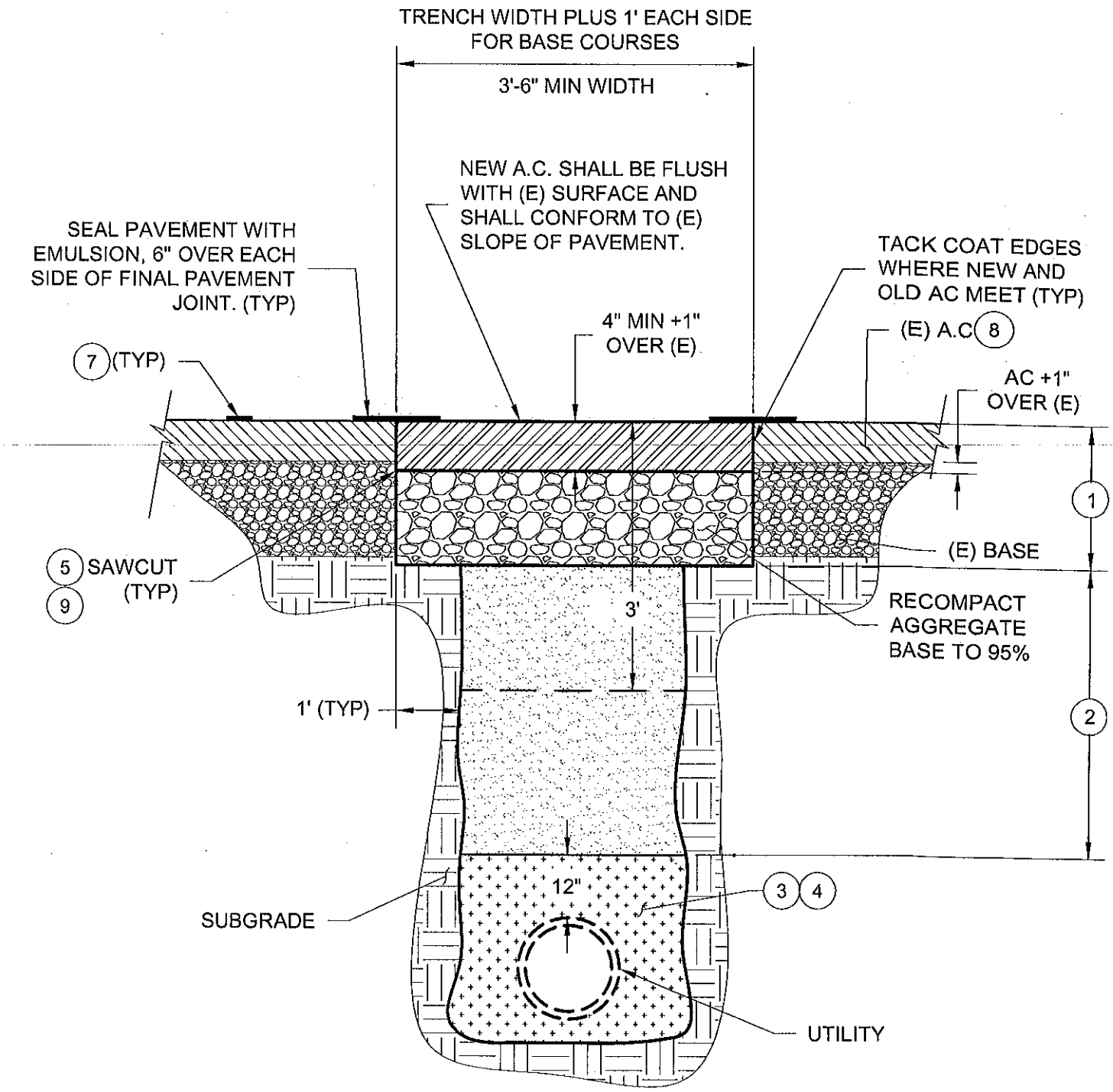

NOTES:

1. TRENCH BACKFILL REPAIR TYPE IS DEPENDENT ON MORATORIUM CONDITIONS AND APPLIES TO BOTH SIDES OF THE TRENCH.
2. A MORATORIUM STREET IS ONE THAT HAS RECEIVED A NEW ASPHALT OVERLAY WITHIN THE LAST 5 YEARS OR ANEW SLURRY OR CAPE SEAL WITHIN THE LAST 2 YEARS
3. SEE SHEETS 3 AND 4 FOR CONSTRUCTION NOTES
4. CONTRACTOR SHALL MAKE AN EFFORT TO PERFORM WORK SO THAT THE MAJORITY OF CONSTRUCTION ACTIVITY IS ON THE SIDE OF TRENCH THAT REQUIRES THE MOST RESURFACING

CITY OF SAN BUENAVENTURA

PUBLIC WORKS DEPARTMENT
ENGINEERING DIVISION

TRENCH BACKFILL/ AC REPAIR ON NON MORATORIUM STREETS

STD. DET. NO. 112

APPROVED BY: PRINCIPAL CIVIL ENGINEER

APPROVED BY CITY ENGINEER R.C.E. 37064

DATE 1-16-16

SHEET 1 of 5

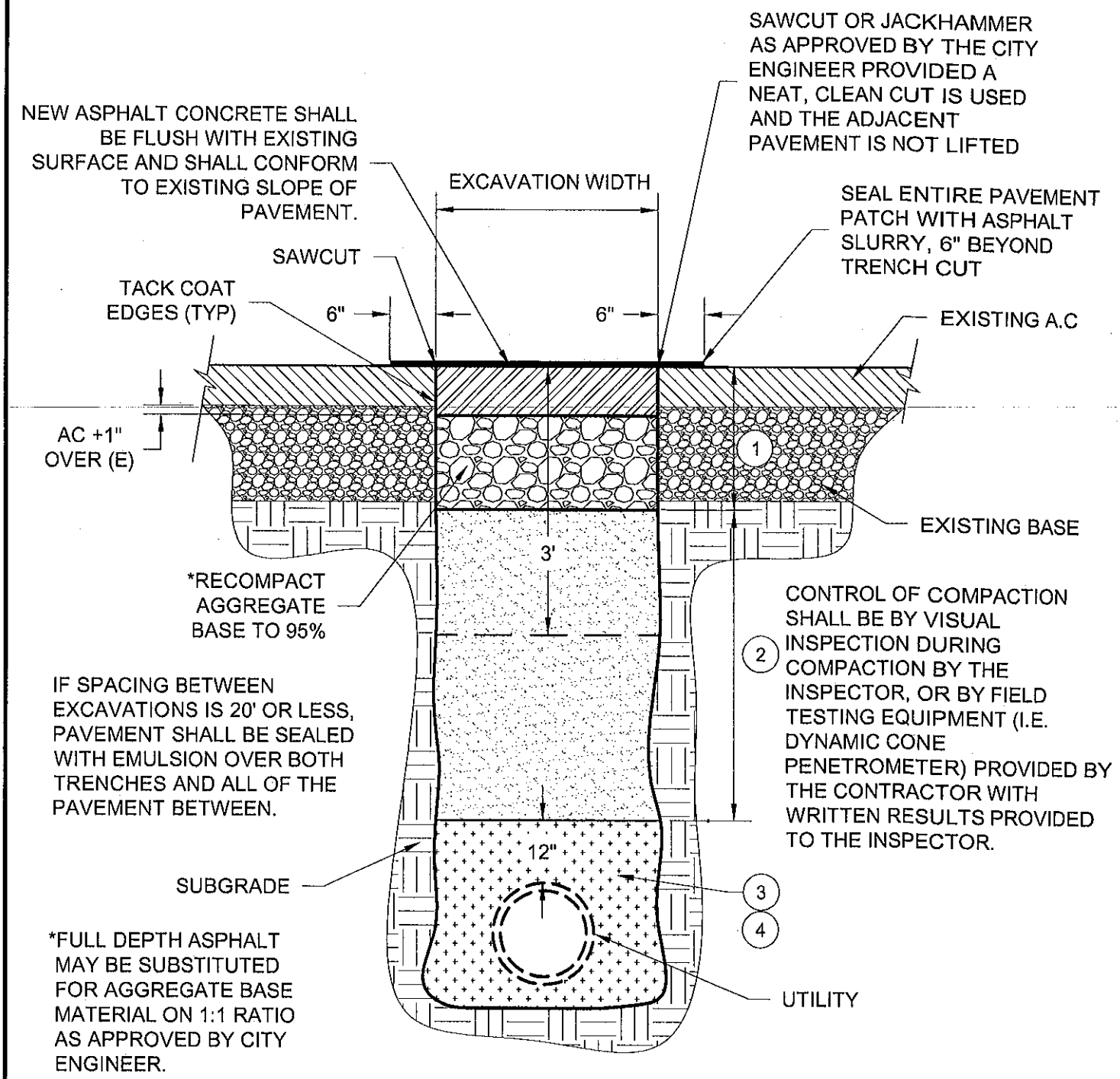

BACKFILL ONLY FOR SMALL RECTANGULAR EXCAVATIONS NO LARGER THAN 32 S.F.

NOTE: SEE SHEET NUMBER 4 AND 5 FOR NOTES

CITY OF SAN BUENAVENTURA	PUBLIC WORKS DEPARTMENT ENGINEERING DIVISION	
POTHOLE/UTILITY CUT REPAIR BACKFILL ON NON MORATORIUM STREETS (LESS THAN 32 SQUARE-FEET ONLY)		STD. DET. NO. 112
APPROVED BY: PRINCIPAL CIVIL ENGINEER	APPROVED BY CITY ENGINEER R.C.E. 37064 DATE 1-16-16	SHEET 2 of 5

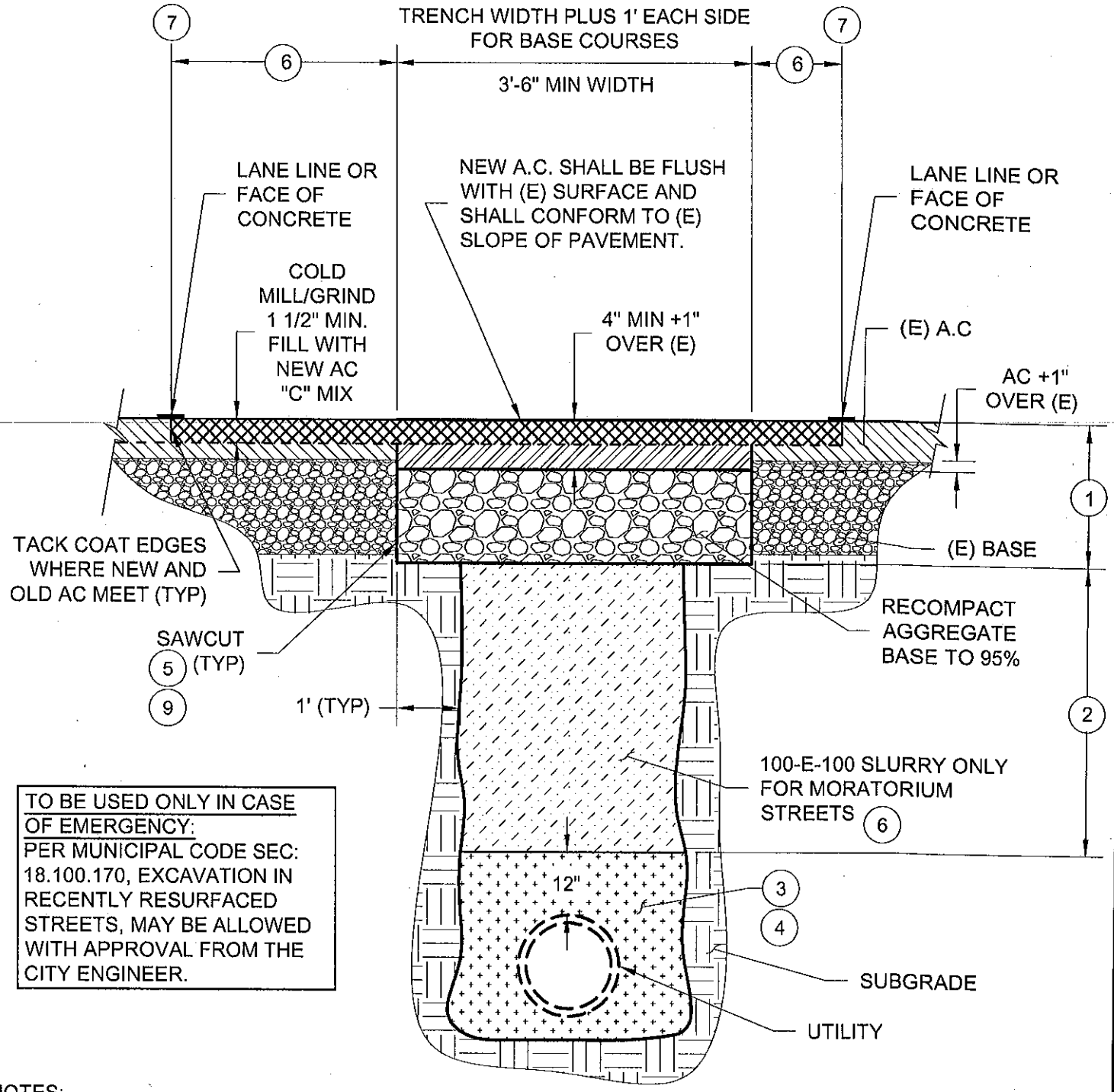

TO BE USED ONLY IN CASE OF EMERGENCY:
PER MUNICIPAL CODE SEC: 18.100.170, EXCAVATION IN RECENTLY RESURFACED STREETS, MAY BE ALLOWED WITH APPROVAL FROM THE CITY ENGINEER.

NOTES:

1. TRENCH BACKFILL REPAIR TYPE IS DEPENDENT ON MORATORIUM CONDITIONS AND APPLIES TO BOTH SIDES OF THE TRENCH.
2. A MORATORIUM STREET IS ONE THAT HAS RECEIVED A NEW ASPHALT OVERLAY WITHIN THE LAST 5 YEARS OR ANEW SLURRY OR CAPE SEAL WITHIN THE LAST 2 YEARS
3. SEE SHEETS 3 AND 4 FOR CONSTRUCTION NOTES
4. CONTRACTOR SHALL MAKE AN EFFORT TO PERFORM WORK SO THAT THE MAJORITY OF CONSTRUCTION ACTIVITY IS ON THE SIDE OF TRENCH THAT REQUIRES THE MOST RESURFACING

CITY OF SAN BUENAVENTURA	PUBLIC WORKS DEPARTMENT ENGINEERING DIVISION	
EMERGENCY TRENCH BACKFILL/ AC REPAIR ALL MORATORIUM STREETS		STD. DET. NO. 112
APPROVED BY: PRINCIPAL CIVIL ENGINEER	APPROVED BY CITY ENGINEER R.C.E. 37064 DATE 1-16-16	SHEET 3 of 5

CONSTRUCTION NOTES

LEGEND

1. STRUCTURAL SECTION - MATCH EXISTING AC THICKNESS + 1"; MATCH EXISTING BASE THICKNESS. MINIMUM SHALL BE 4" AC OVER 8" PMB. FOR P.C.C. PAVING, MINIMUM THICKNESS IS 8" (EXCEPT AC OVERLAY ON P.C.C. SHALL MATCH EXISTING).
2. BACKFILL - NATIVE OR IMPORT, COMPACTED TO 90% RELATIVE DENSITY. OR 100-E-100 SLURRY AS APPROVED BY THE CITY ENGINEER. COMPACTION TEST REPORT FROM A CERTIFIED SOIL LAB MUST BE PROVIDED TO CITY INSPECTOR PRIOR TO AC OR PCC PAVING.
3. PIPE ZONE - IMPORT CLEAN SAND WITH SAND EQUIVALENT OF 20 OR GREATER. COMPACT TO 90% RELATIVE DENSITY. SEE STANDARD DETAIL 113 FOR UTILITY OR STRUCTURE.
4. IF SAND EQUIVALENT IS 20 OR GREATER, JETTING MAY BE USED IN PIPE ZONE ONLY WHEN APPROVED BY THE CITY ENGINEER.
5. STREET SHALL BE SAWCUT. IF SAWCUT IS DAMAGED AFTER UTILITY IS INSTALLED AND BACKFILL IS COMPLETE, THE STREET SHALL BE RE-SAWCUT SO THAT A CLEAN EDGE REMAINS FOR PAVING. SAWCUT A MINIMUM OF 1/2 PAVEMENT THICKNESS. FOR P.C.C. OVERLAYED BY ASPHALT, SAWCUT THICKNESS OF P.C.C. PLUS A.C. THICKNESS. ALL ASPHALTIC CONCRETE JOINTS SHALL BE SEALED WITH ASPHALTIC EMULSION, 6" MINIMUM EITHER SIDE BEFORE AND AFTER PAVEMENT IS PLACED. JOINTS OF NEW ASPHALTIC CONCRETE SHALL BE FLUSH WITH THE EXISTING PAVEMENT.
6. RECENTLY RESURFACED/MORATORIUM STREETS: FOR PERPENDICULAR TRENCHES, SEAL PAVEMENT WITH SLURRY SEAL CONSISTING OF MIX DESIGN APPROVED BY CITY ENGINEER, OVER ENTIRE TRENCH WIDTH PLUS AN ADDITIONAL 6' ON EITHER SIDE OF TRENCH CENTERLINE. FOR LONGITUDINAL TRENCHES,MILL AND FILL ENTIRE AREA ADJACENT TO TRENCH AND EXTEND TO NEXT LANE LINE OR CURB/GUTTER AS APPLICABLE (REPAIR ENTIRE LANES THAT ARE IMPACTED BY TRENCH CUT) UNLESS OTHERWISE APPROVED BY THE CITY ENGINEER. PAVEMENT SHALL BE CONTINUOUS WITH JOINTS ONLY WHERE NEW AND EXISTING ASPHALT/CONCRETE JOIN.
7. THE CONTRACTOR SHALL REPLACE TRAFFIC STRIPING, STREET MARKINGS, AND CURB MARKINGS REMOVED OR DAMAGED BY THE WORK WITH LIKE KIND MATERIALS TO MATCH EXISTING STRIPING.
8. FOR MULTIPLE TRENCH REPAIR LOCATIONS ADJACENT TO EACH OTHER, DISTANCE BETWEEN REPAIRS SHALL BE NO LESS THAN 4' OTHERWISE AREA BETWEEN TRENCHES SHALL BE A PART OF THE REPAIR. FOR MULTIPLE LOCATIONS LESS THAN 32 SQ FT IN SIZE. THE PAVEMENT SHALL BE SEALED WITH A TYPE II SLURRY SEAL TO INCLUDE THE FULL WIDTH (+1') AND LENGTH (+1') OF ALL TRENCH CUTS.
9. TRENCH REPAIR MUST BE UNIFORM AND SQUARE. ZIG ZAG TRENCHES ARE NOT ALLOWED.

NOTE:
TRENCH BACKFILL DETAILS ARE APPLICABLE FOR ALL UNDERGROUND UTILITY INSTALLATIONS INCLUDING, WITHOUT LIMITATION; TELECOMMUNICATIONS (CABLE, T.V., PHONE, ETC.), GAS, ELECTRIC, AND ALL UTILITIES INSTALLING CONDUITS WITHIN CITY STREETS WITHOUT A FRANCHISE AGREEMENT WITH THE CITY.

CITY OF SAN BUENAVENTURA	PUBLIC WORKS DEPARTMENT ENGINEERING DIVISION	
TRENCH BACKFILL		STD. DET. NO. 112
APPROVED BY: PRINCIPAL CIVIL ENGINEER	APPROVED BY CITY ENGINEER R.C.E. 37064 DATE 1-16-16	SHEET 4 of 5

GENERAL NOTES

SPECIFICATIONS:
ALL BACKFILL SHALL BE PLACED AND TESTED IN ACCORDANCE WITH STANDARD SPECIFICATIONS FOR PUBLIC WORKS CONSTRUCTION EXCEPT AS OTHERWISE NOTED HEREON.

MAXIMUM LIFTS*

A. MECHANICAL COMPACTION

LIFT	EQUIPMENT	NOTES
3.00'	HYDROHAMMER	(NOT TO BE USED WITHIN 4' OF ANY PIPE)
1.50'	VIBRATORY	(NOT TO BE USED WITHIN 2' OF ANY PIPE)
1.00'	ROLLING STOCK	WALK BEHIND AND MINI.
.67' = 6"	HAND TAMPER	
.33' = 4"	HAND VIBRATORY PLATE	

B. HYDRAULIC DENSIFICATION

2.00'	JETTING UNDER PRESSURE	(ONLY USED WHEN APPROVED BY CITY ENGINEER)

NOTE: EITHER FILL OR BEDDING MUST BE FREE DRAINING.

*A LIFT IS ONE LAYER OF MATERIAL PLACED, PROCESSED, AND COMPACTED AS A UNIT AT OPTIMUM MOISTURE CONTENT.

CONTROL OF COMPACTION
VISUAL INSPECTION AND SOIL TESTING AS REQUIRED BY THE INSPECTOR. COMPACTION TEST REPORT FROM CERTIFIED SOIL LAB IS REQUIRED FOR ALL WORK COMPLETED WITHOUT CITY INSPECTOR VISUAL PRIOR TO AC OR PCC RESURFACING

ROCK IN BACKFILL
SUFFICIENT SAND AND FINES MUST BE MIXED INTO THE BACKFILL TO FILL VOIDS WHEN SOIL CONTAINS ROCKS. MAXIMUM SIZE ROCK IN FILL IS 6 INCHES, BROKEN PCC AND AC IS ALLOWED IN NATIVE BACKFILL ONLY, WITH 6 INCH MAXIMUM SIZE.

LABORATORY MAXIMUM DENSITY

METHOD 1: LABORATORY MAXIMUM DENSITY OF SOIL SHALL BE DETERMINED BY ASTM D1557-91. (COMPACTION EFFORT EQUALS 33,750 FT.-LBS. PER CUBIC FOOT.)

METHOD 2: LABORATORY MAXIMUM DENSITY OF BASE AND SUB-BASE MATERIALS SHALL BE DETERMINED BY TEST METHOD NO. CALIF. 216, METHOD A.

SAND EQUIVALENT
SAND EQUIVALENT SHALL BE DETERMINED BY TEST METHOD NO. CA. 217.

FIELD DENSITY
FIELD DENSITY OF SOIL SHALL BE DETERMINED BY ASTM D1556-00, USING THE BASE PLATE AND MAKING SUITABLE ADJUSTMENTS FOR VOLUMES OF ROCKS IN THE TEST HOLE, OR BY TEST METHOD NO. CALIF. T-231-B, PARTS A-E AND G FOR NUCLEAR DEVICES.
THE WORDS "RELATIVE COMPACTION" OR "RELATIVE DENSITY" SHALL MEAN THE RATIO OF THE FIELD DENSITY TO THE LABORATORY MAXIMUM DENSITY EXPRESSED IN PERCENT.

CITY OF SAN BUENAVENTURA	PUBLIC WORKS DEPARTMENT ENGINEERING DIVISION	
TRENCH BACKFILL		STD. DET. NO. 112
APPROVED BY: PRINCIPAL CIVIL ENGINEER	APPROVED BY CITY ENGINEER R.C.E. 37064 DATE 1-16-16	SHEET 5 of 5