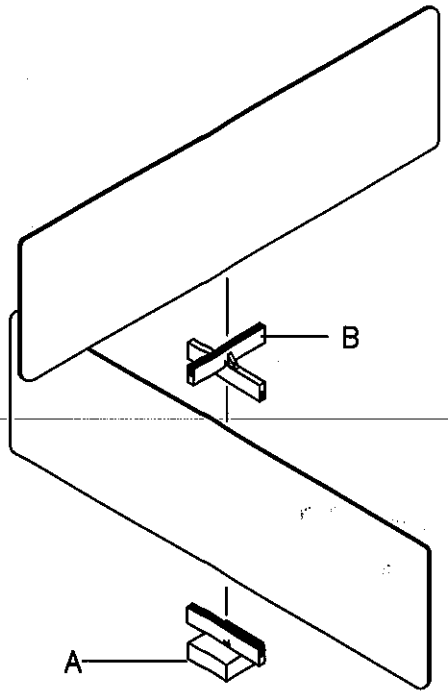

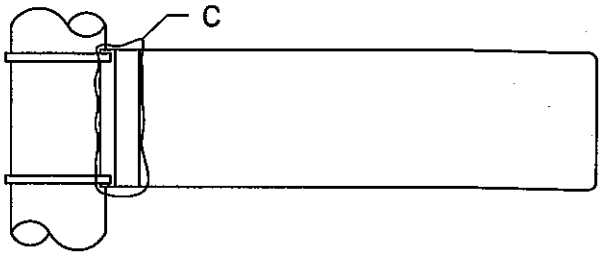

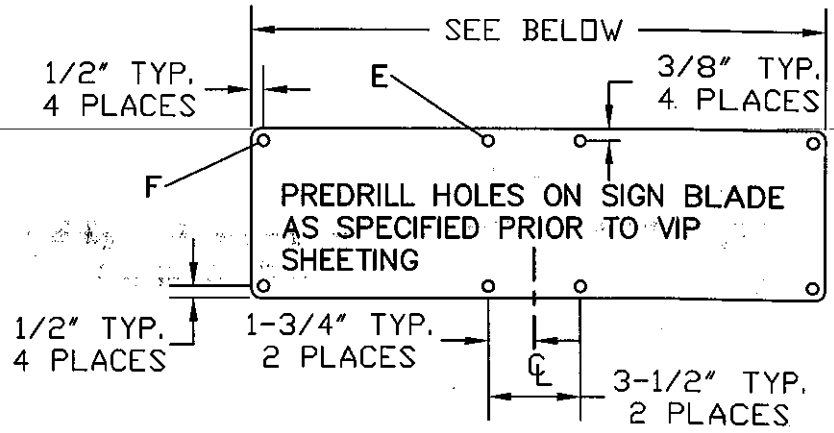

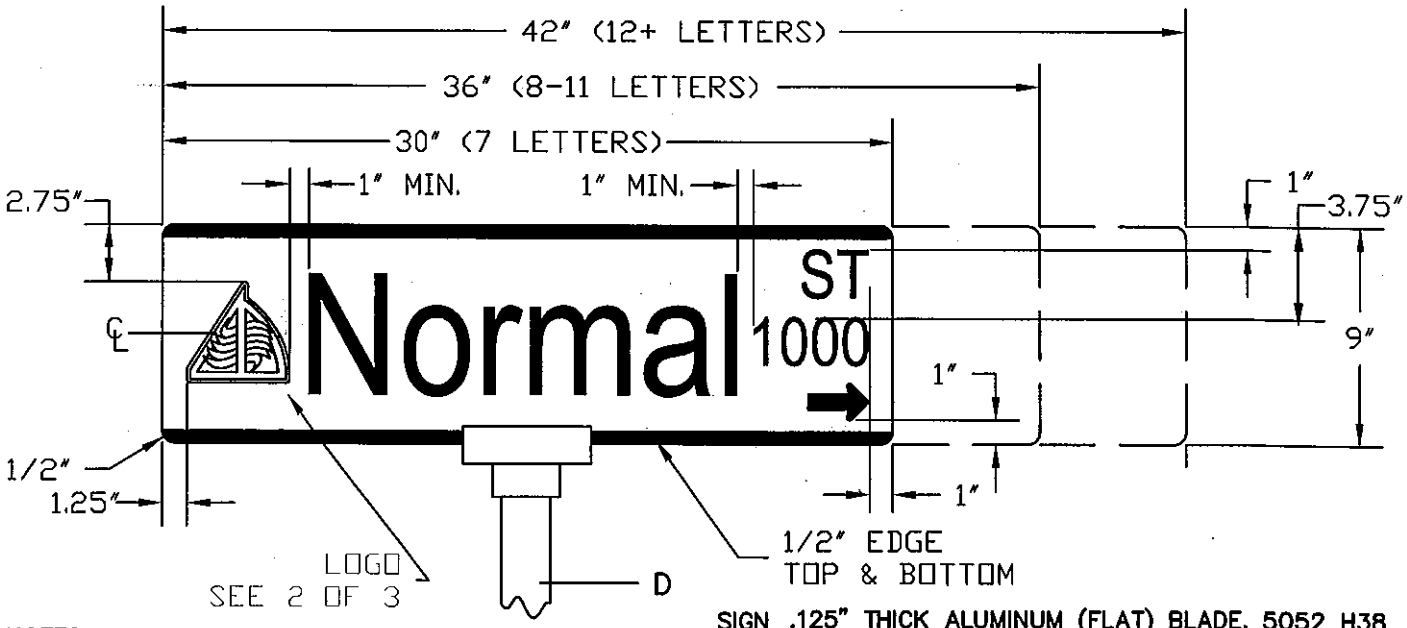

NOTES:

A. STYLE #850F LONG 2" SQ., BOLT THRU.
B. STYLE #808F BOLT THRU 90° CROSSPIECE.
C. STYLE #730F, 9", SPACER 9" L x .75" W x .080 THK w/ (2) 7/16" HOLES 8" ON CENTER.
D. 2" SQUARE POST, 14 GA. GALVANIZED STEEL
E. DRILL 3/8" DIA. AS SHOWN (INTERIOR HOLES)
F. DRILL 7/16" DIA. AS SHOWN (EXTERIOR HOLES)

*STYLE # REFER TO TRAFFIC SAFETY, INC. CATALOG
*ALL FASTENERS TO BE 5/16-18 x 3/4L, VANDAL PROOF SS SCREWS.
*VANDAL PROOF NUTS REQUIRED FOR ITEM C.

SIGN MATERIAL: .125" THICK ALUMINUM (FLAT) BLADE, 5052 H38 ALLOY. COVERED WITH DIAMOND GRADE/VIP SHEETING, DOUBLE FACED. ENTIRE SIGN TO BE COATED WITH 1150A OVERLAY.

COLOR: BACKGROUND TO BE 3M HIGHWAY BLUE. LETTERING & EDGES TO BE 3990 WHITE.

FONT: FEDERAL HIGHWAY TYPE 'C', 5" LETTER HEIGHT, UPPER & 3.75" LOWER CASE, TYPE 'B' FONT MAY BE USED TO FIT WITHIN GIVEN LIMITS. BLOCK NUMBERS 2" HEIGHT. ST, RD, AVE 2.0" HEIGHT UPPER CASE. ARROW 1.5" HEIGHT BY 2.5" WIDE, FACING OPPOSITE DIRECTION EACH SIDE.

CITY OF SAN BUENAVENTURA

PUBLIC WORKS DEPARTMENT
ENGINEERING DIVISION

DESIGNED BY: J.B.
DRAWN BY: D.T.
CHECKED BY: J.S.
APPROVED BY: STREETS SUPERINTENDENT

STREET NAME SIGN

APPROVED BY: CITY ENGINEER R.C.E. 37604 DATE 8-9-01

STD. DET. NO. 109

SHEET 1 of 3

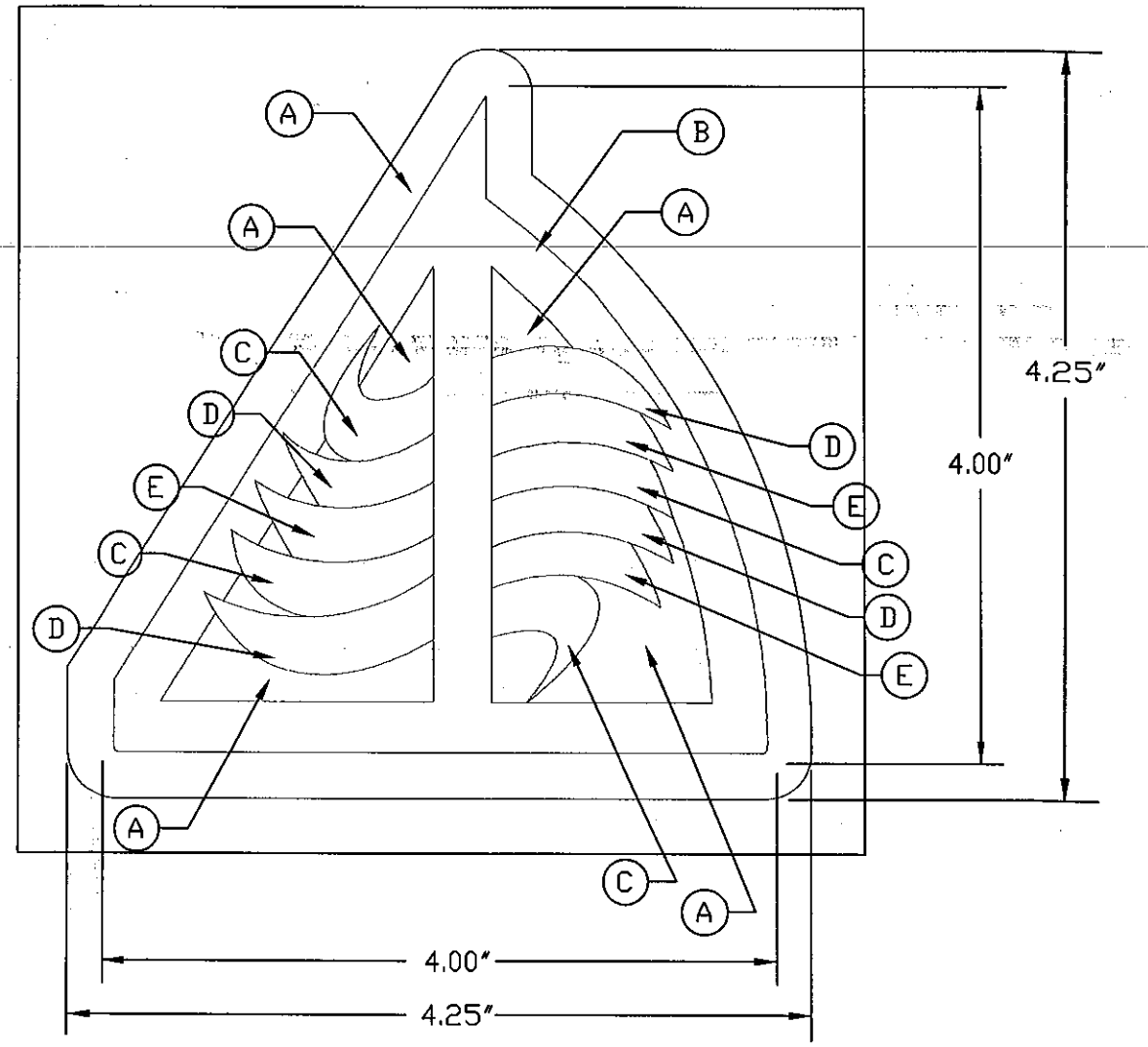

SCALE= 1:1

(A) 3990 WHITE

(B) 8831 BLUE

(C) PANTONE RHODAMINE RED CVU

(D) PANTONE 109 CVU (YELLOW)

(E) PANTONE 326 (GREEN)

THE LOGO CAN BE INCORPORATED INTO THE COMPLETE SIGN OR BE AN ADD-ON PATCH. THE MATERIAL FOR THE PATCH IS HIGH INTENSITY.

LOGO IS AVAILABLE IN VARIOUS ELECTRONIC FILE TYPES. CONTACT ENGINEERING AT 654-7767.

CITY OF SAN BUENAVENTURA	PUBLIC WORKS DEPARTMENT ENGINEERING DIVISION	
DESIGNED BY: J.B. DRAWN BY: D.T. CHECKED BY: J.B. APPROVED BY: STREETS SUPERINTENDENT	STREET NAME SIGN LOGO SPECIFICATIONS APPROVED BY CITY ENGINEER R.C.E. 37604 DATE 8-9-01	STD. DET. NO. 109 SHEET 2 of 3

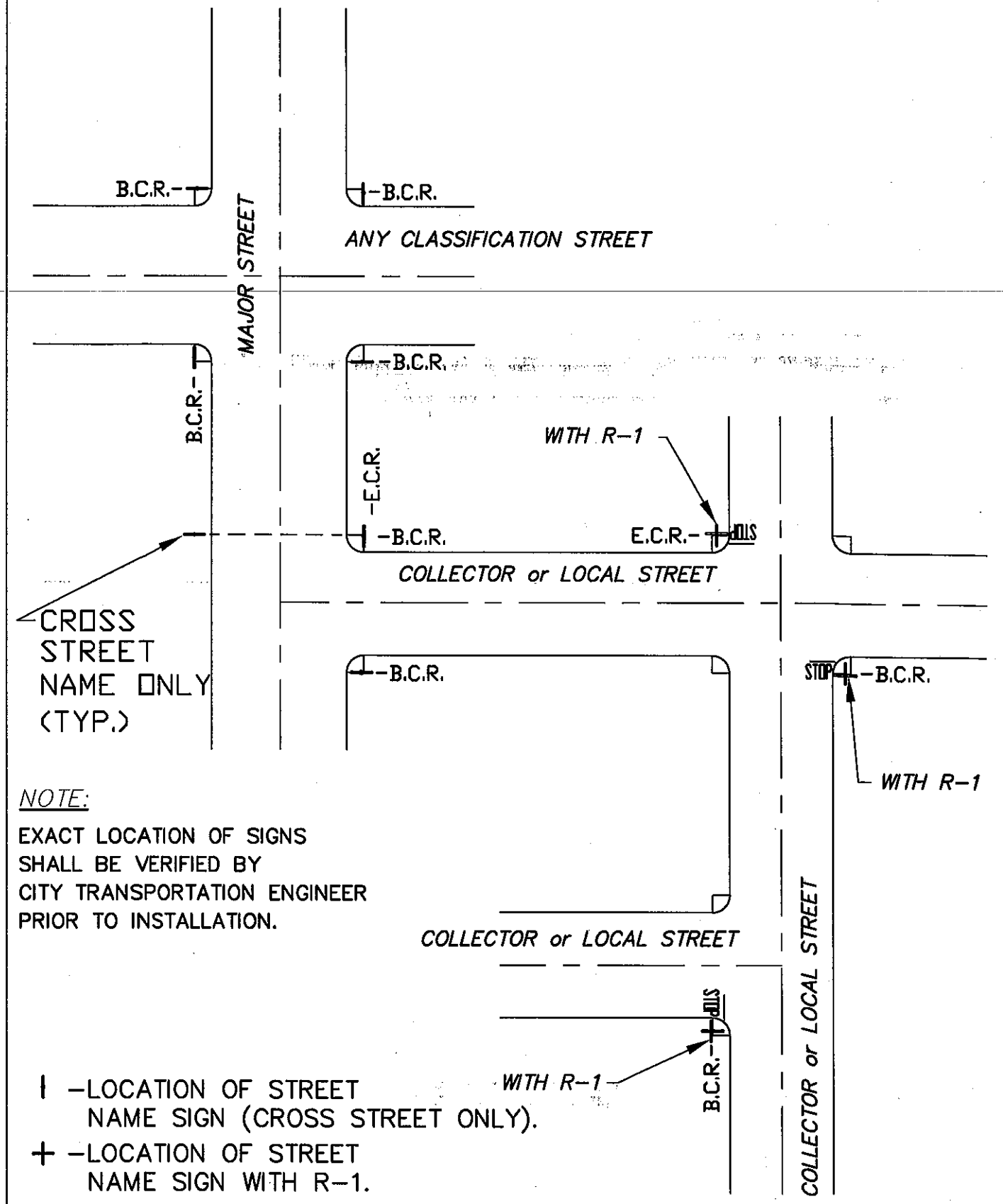

NOTE:

EXACT LOCATION OF SIGNS SHALL BE VERIFIED BY CITY TRANSPORTATION ENGINEER PRIOR TO INSTALLATION.

| –LOCATION OF STREET NAME SIGN (CROSS STREET ONLY).

+ –LOCATION OF STREET NAME SIGN WITH R–1.

CITY OF SAN BUENAVENTURA

PUBLIC WORKDS DEPARTMENT
ENGINEERING DIVISION

DESIGNED BY: R.D.
DRAWN BY: D.T.
CHECKED BY: JS
APPROVED BY: STREETS SUPERINTENDENT

STREET NAME SIGN LOCATION

APPROVED BY CITY ENGINEER R.C.E. 37064 DATE 3-7-01

STD. DET. NO. 109

SHEET 3 of 3