E.D.I.T.H.

Exit Drills In The Home

Exit Drills In The Home can help people prepare for an emergency. Most home fires occur at night, when people are the least prepared. Home fires can become a disaster if you and your family are not familiar with how to escape during an emergency.

How to Design Your

Fire Escape Plan

To design your own fire escape plan, sketch the floor plan of your home on a piece of paper. Indicate on the plan all doors, windows and other areas from which you could escape from each room in your home. Draw arrows to indicate the normal exits which would be your primary escape route. With an alternate color, draw arrows to indicate a secondary exit from each room in the home.

Meeting Place

Choose a location outside the home where family members should meet once they have safely escaped. A neighbor's front yard or sidewalk may be an ideal meeting place.

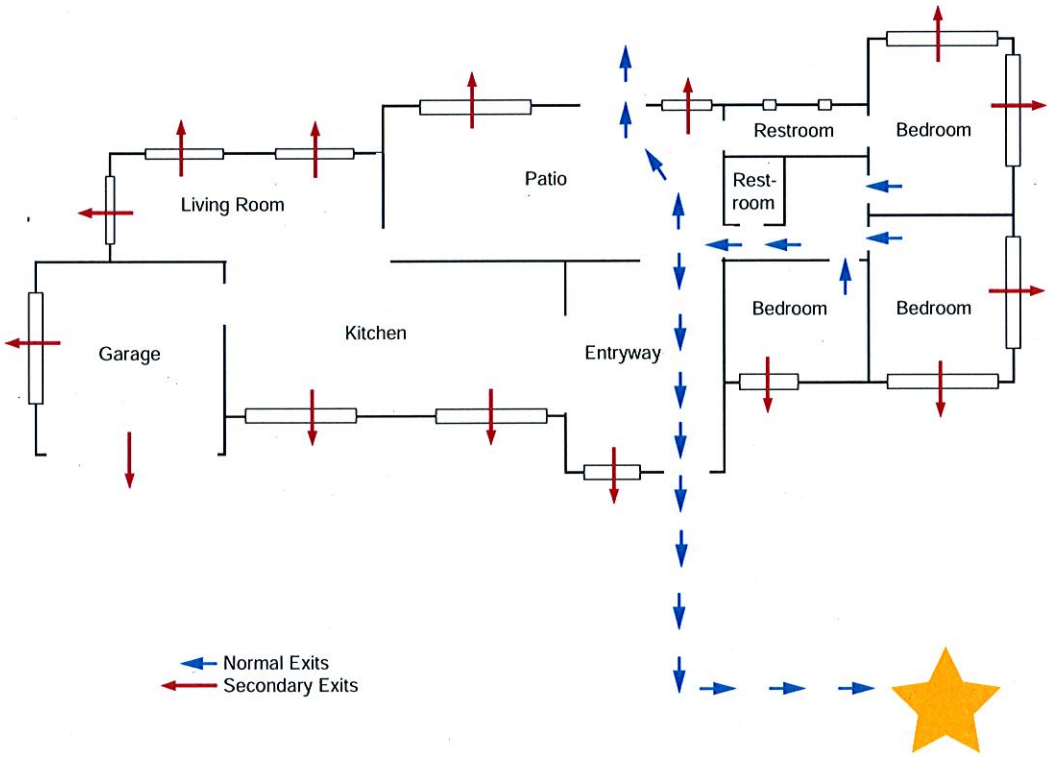

Smoke Detectors

In California, all residents are required to have at least one operating smoke detector. The number of detectors you need and their location depends upon the layout of your home. There should be one smoke detector located near sleeping areas. It is also a good idea to have at least one detector on each level of your home, including the basement.

9–1–1

Everyone should know the location of telephones in the home and where to find a telephone outside of the home. It is very important that children also know the "911" phone number in order to report a fire or other emergencies to authorities.

Practice, Practice, Practice

Your fire escape plan may look great on paper, but does it really work? Regular exit drills in the home will allow you to test the plan and make adjustments as needed. When practicing your exit drills in the home, remember to use alternate escape routes as well. Children should be closely supervised during drills in the home and no one should take unnecessary chances.

Special Needs

People with physical or mental handicaps face greater risks during a fire emergency. People with special needs should sleep in a bedroom near someone who can help in the event of an emergency. A physically handicapped person may require a sleeping area on the ground floor. Design a special escape plan based on the abilities of the person.

Tips

- [ ] Prepare a fire escape plan
- [ ] Install and maintain smoke detectors
- [ ] Practice exit drills in the home regularly
- [ ] Examine your home for fire hazards and take steps to prevent a fire before it occurs

In 2006, 80 percent of all fire deaths were caused by home fires. Last year, roughly 2,600 people were killed by home fires and 12,500 were injured, according to the National Fire Protection Association. Advanced planning will ensure that you are ready for any fire emergency and can provide you and your loved ones peace of mind.